Energy Savings in Captive Power / Co-generation Power Plants

K G Sudhan Ramkumar (STEAG Energy Services (India) Pvt. Ltd.),
Kgs.ramkumar@steag.in, +91 8285157719

steag

STEAG Energy Services India
WHAT WE DO

steag

PROJECT DEVELOPMENT & RENEWABLE

- Pre Feasibility Study
- Detailed Project Report
- Environmental Studies
- Assistance in obtaining various permits and clearances
- Assistance in financial closing

ENERGY TECHNOLOGIES

- Basic design studies
- Plot plan & GA drawings and P&I diagrams
- Detailed engineering including preparation of tender specification
- Tender evaluation & bid recommendation
- Vendor drawing review and inspection
- Project management monitoring and expediting
- Erection and commissioning supervision
- Lenders Engineering

PLANT SERVICES

- **Energy Auditing & PAT Consultancy**
- Performance Testing
- Pre-commissioning / Commissioning Support
- Diagnostic Study & Testing
- Residual Life Assessment / Condition Assessment

OPERATION & MAINTENANCE

- Advisory assistance
- Taking charge of operation management and maintenance
- Spare parts management
- Risk management
- Quality assurance
- Internationally experienced staff
- Software to support operation and maintenance

TRAINING & ADVISORY SERVICES

- Tech Training Programs
- Personality Development
- Simulator Training
- Technology evaluation and comparison
- Inspection services
- Case Study

SYSTEM TECHNOLOGIES

- Online Diagnostic System
- Online Optimization Package
- SI® System
- Simulators

Leverage to Improvement

steag

Post Engineering:

- ✓ Turbine
- ✓ Boiler
- ✓ I&C retrofit

IT-Tools:

- ✓ Operation management
- ✓ Optimization systems
- ✓ Analytics

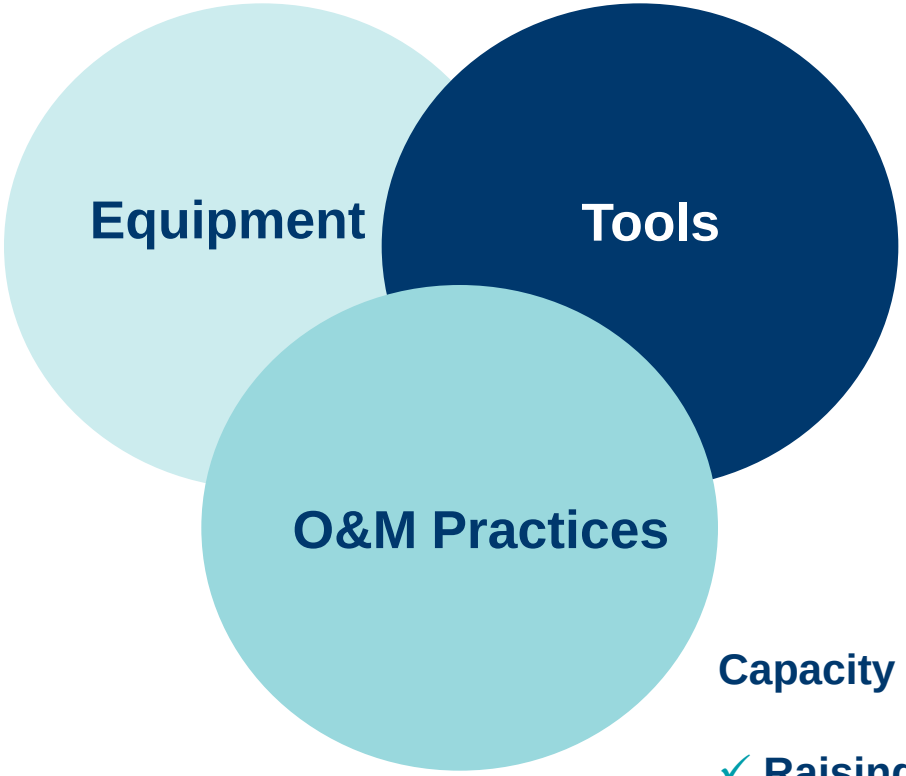

Capacity Building:

- ✓ Raising awareness
- ✓ Changing behaviour
- ✓ Optimizing procedures

How to improve ?

steag

First Step: Low hanging fruits

- ❑ Improve efficiency by improving operation and maintenance

Next steps

- ❑ Audit or “map the plant using off line modeling tool e.g. Ebsilon® Professional
- ❑ Online optimization System for Turbine Performance Monitoring and Optimization of System

Comprehensive Approach towards Energy Efficiency- Energy Savings

steag

Analyse the gap

- ✓ Experts Walk Down (low hanging fruits)
- ✓ Analysis of performance data (boiler efficiency, fuel consumption, turbine heat rate etc.)
- ✓ Assessment on O&M routines
- ✓ Mapping – modeling

Identify Potential

- ✓ Deviations between design and operation parameters
- ✓ Techno-economical assessment

Define Measures

- ✓ Short / medium term approach
  - Optimization of operation (processes, habits)
  - Minor engineering modifications
- ✓ Medium / long term approach
  - Optimization by implementation of monitoring systems
  - Optimization of maintenance
- ✓ Long term approach
  - Major boiler / turbine / flue gas treatment retrofits

Ensure sustainability

- ✓ Verification of project success vs. target
- ✓ Recurrent auditing by “efficiency cell“

Energy saving opportunities in Captive/Co-Gen power Plants

steag

IN CPP

- **Unit sizing small:** Reliable power supply and less impact on production during unit Trip- out
- **Restricted capacity utilization:** Target is to meet only for process requirement and Load demand
- **No Power Export Targets**
- **Partial load operation of running units to match own demand**
- **Requirement of Generation variation to manage planned & unplanned load demand of Process**

Energy Saving Opportunities

- **Reduction of FRS DP (Optimize DP across FRS)**
- **Minimizing Boiler Losses**
- **Using Waste Heat For Powering Refrigeration and Air Conditioning Units Using Vapor Absorption (VAM)**
- **Condenser Vacuum Improvement**
- **Reducing malfunction of Steam Traps**
- **Optimizing Water Balancing**
- **Installation of VFDs**
- **Improving operational parameters as per best practices**

Optimization: Process Operation

steag

Boiler Diagnostics

Mass & energy balance around the boiler

- Calculates boiler efficiency

Calculation of Heat Transfer Coefficients

- Determination of Soot blowing criteria

Monitoring of Heat Exchanger Surfaces

- Determination of Soot blowing effect

Monitoring of different coal types and their fouling effect

- Determination of Soot blowing crtieria per coal type

Calculation of Flue gas temperature profile

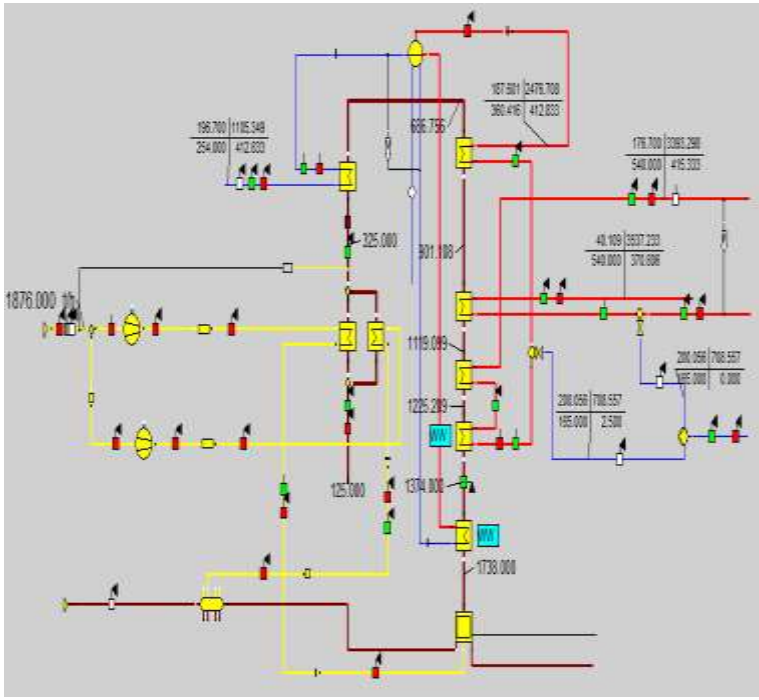

Minimizing engineering Efforts by one Graphic for

- Simulation
- Validation
- Optimization

Predictive Tool

steag

Ebsilon as a predictive tool is adopted in the form of **'What if'**. 'What if' analysis includes the following items, which can be modified by the user to see the effects on plant generation, heat rate and boiler efficiency: -

- Throttle pressure.
- Throttle temperature.
- Reheat temperature.
- Condenser backpressure, cleanliness factor
- Superheat spray flow.
- Reheat spray flow.
- Steam extraction
- Final feed water temperature.
- Boiler excess air.
- Flue gas exit temperature.
- Heater bypass
- Fuel composition and HHV
- Ambient air condition.

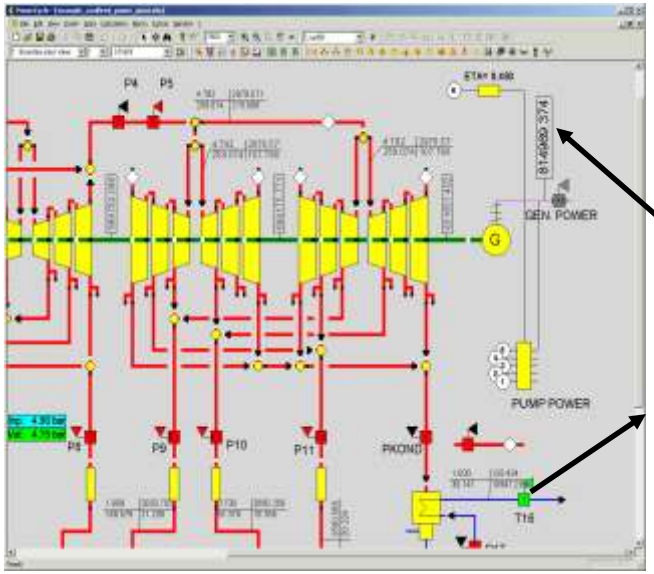

Easy What-If Analysis direct in P&I Diagrams without additional Layout Engineering

Applications

steag

- **Gas and Combined Cycle Plants**
  - Gas turbines:
    - GT from OEM-GTlib
    - GT with individual characteristics
    - GT build from compressor, combustion chamber, turbine
  - Heat recovery steam generators
    - various pressure stages
    - Supplementary firing

Applications

steag

- **CHP-Plant (cogeneration)**
  - piston engine fired with diesel / natural gas

- **CSP - Solar thermal plants**
  - Standard solar field component
  - detailed model with EbsSolar
  - parabolic trough, linear fresnel type, solar tower
  - storage systems

Advantages of Ebsilon in PAT Scheme (power generation)

steag

Diagnostic study of the power generating unit	✓ Shortens time for diagnostic study. ✓ Reduces number of manpower for arriving at energy efficiency measures ✓ Support activities of Energy Auditors ✓ Eliminates the need for large number of special instruments and manpower needed for each subsystem analysis
Identification of Energy Saving Areas & Measures	✓ eliminates the possibility of making recommendations without identifying the impact on the other subsystems ✓ Ensures reliability of data/outputs ✓ Shorten time for determining energy efficiency measures; allowing more time for implementation ✓ Improve the unit heat rate through better operational practice.

Project Example 1: Performance Assessment of cogeneration plant

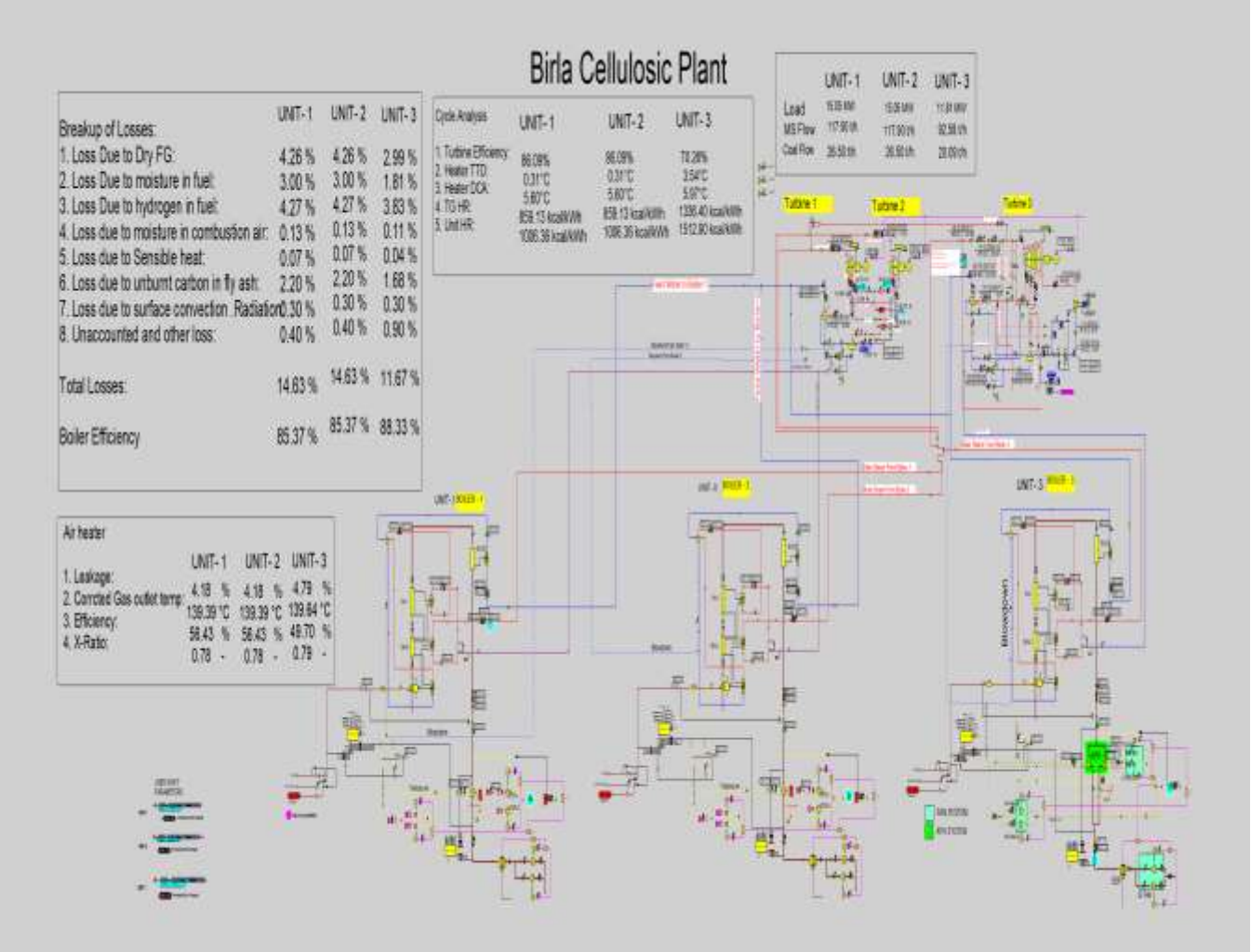

Client: Aditya Birla

Plant: Birla Cellulosic

Task:

1. To compare the performance and gap analysis of complete plant and identify the gray areas to improve energy efficiy measure and reduce SEC.

Project Example 2: Feasibility Study of WHRB

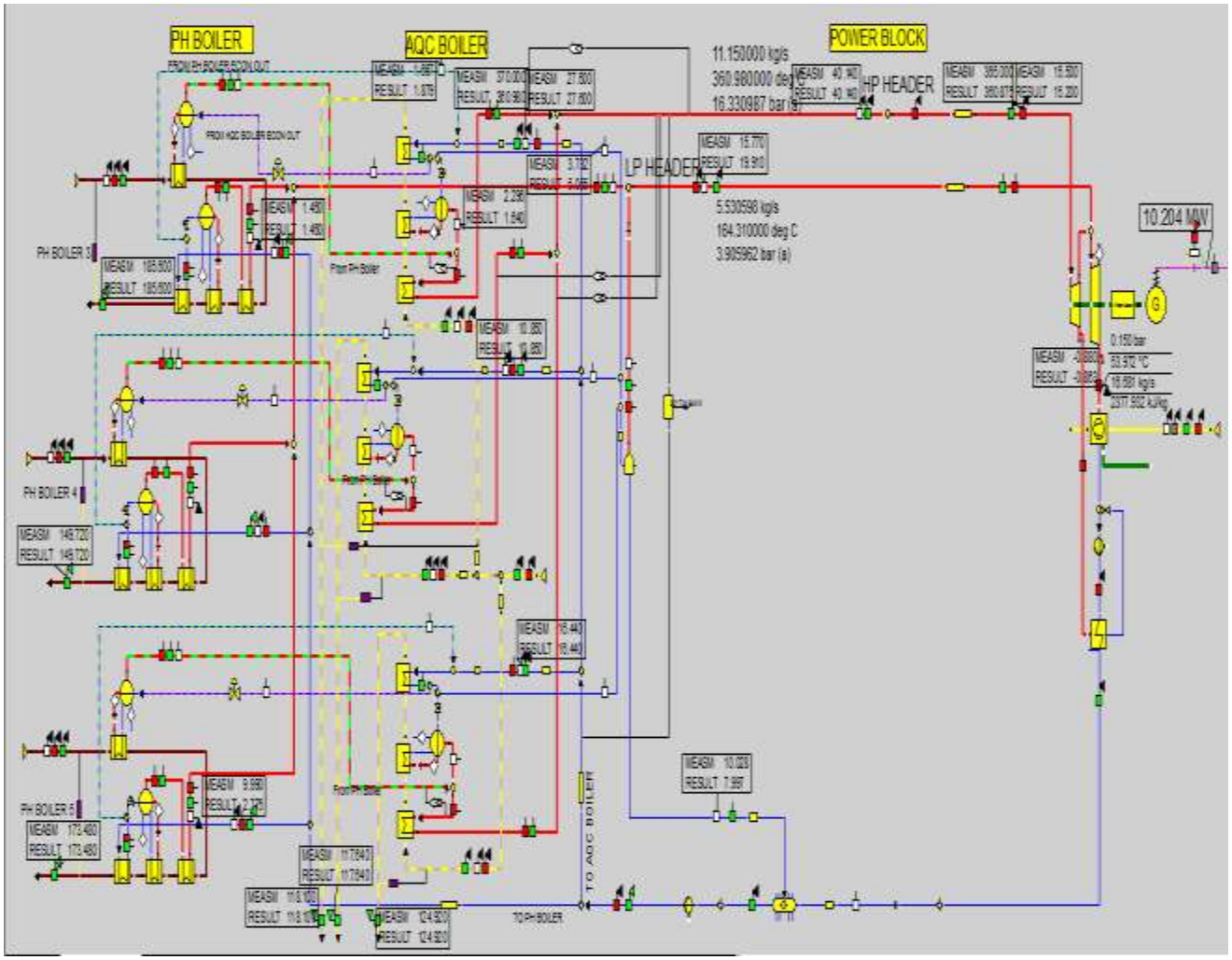

Feasibility study in Existing WHRB and Proposed Solar Integration

Client : Shree Cement

Task:

1. To assess the perfromance of existing WHRB and margine available
2. Multiple designs to find out best/optimum place for injection and water extraction sources
3. Design alternatives with parabolic trough and linear Fresnel including cumulative power generation for a typical meteorological year.

Project Example 3: To Generate HMBD

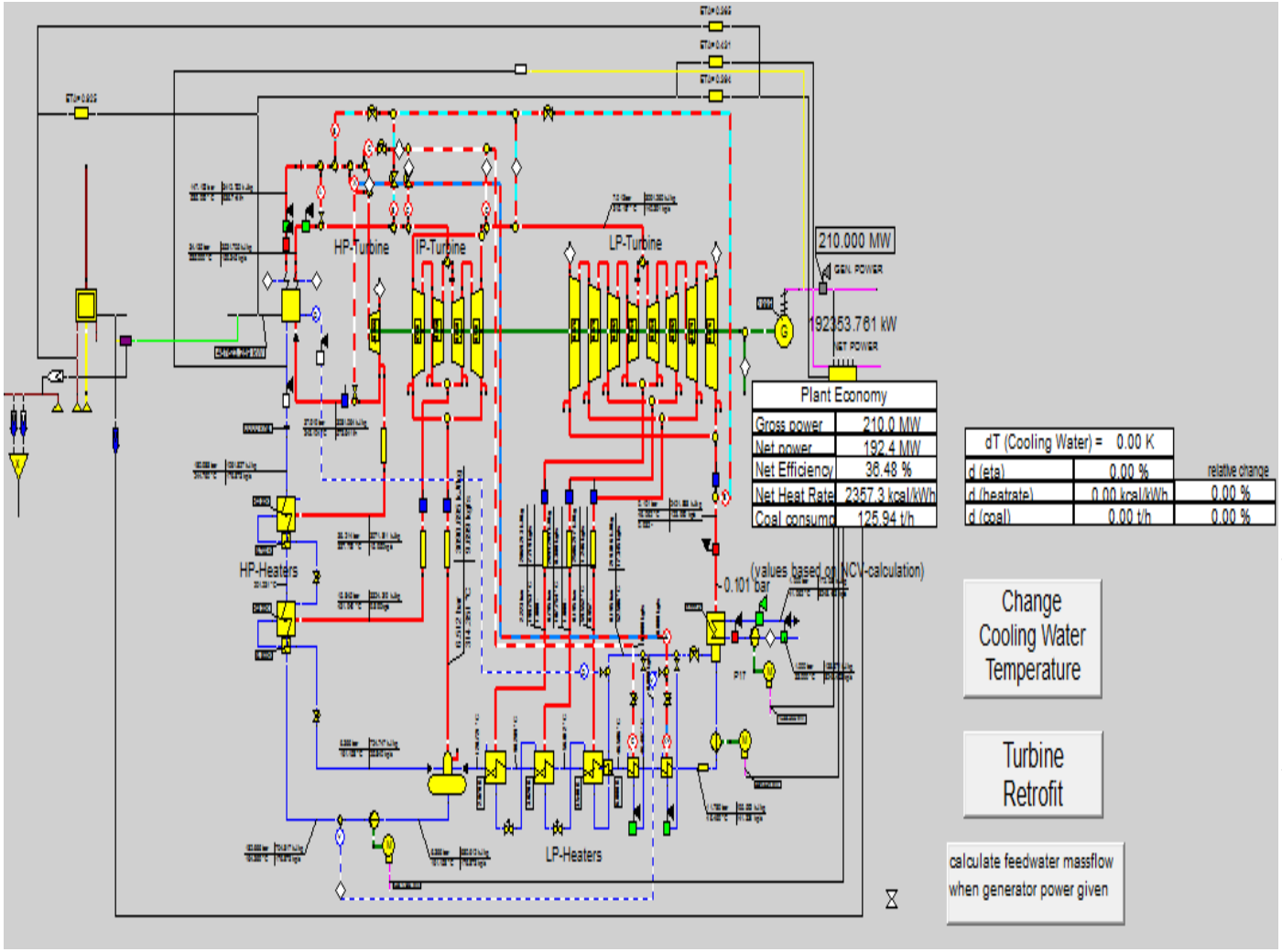

210 MW Cycle model

Task:

1. Generate Heat and mass Balance

2. What –if analysis at different Cooling water temperature, Turbine Retrofit, Calculate feed water flow with different load.

Ebsilon in Indian Power Sector

steag

STEAG have

- ❑ Provided 65 Ebsilon Licenses to the State Generating Units
- ❑Trained more than 150 engineers in application of Ebsilon software
- ❑Assisted State Generating Units in mapping their power plants to assess and quantify energy efficiency potential and determine energy efficiency measures
- ❑Assisted State Generating Units in developing proposals for energy efficiency improvement – short term and long term.
- ❑Supporting State Generating Units in introduction / implementation of energy efficiency measures
- ❑Technical Audit study using modeling technique at 16 CCPP of Bangladesh.

BHEL-Electronics Division, Bangalore	
BHEL R&D, Hyderabad	
CPRI, Bangalore	
Giz, India	
NTPC, Netra	
NPC, Chennai	
Aditya Birla Management Corporation Pvt. Ltd. (Corporate Technical & Energy Services)	
Shree Cement	

Benefits

steag

- Operation
  - Get Hints for Improvements of Operation parameter
  - Minimize Outage Time or prevents Outage by guided Identification of Origin of Disturbances even they are not measured by Sensors
  - Costs even for Co-Generation of heat and electrical Power by always closed and validated Balances
  - Automatic Adaptation to current Operation Characteristics without expensive Calibration Procedures

- Maintenance
  - Recognition of creeping Deviations (Fouling Factors)
  - Improved Judgment of faulty Measurement or Degradation of Components

steag

For Any Further Information Contact,

K G Sudhan Ramkumar kgs.ramkumar@steag.in

+91 8285157719